PANTONE REPORT : THE PAGES OF MICHEL DAVID

PAGE 2

EXPERIMENTATION ON A 4-STROKE 144CC ENGINE WITH CARBURETOR

Page created on January 21, 2001 Return to menu M.David

So I will now describe to you in as much detail as possible what I experienced as an improved solution on a small Honda 144cc 4-stroke engine.

Click on the photo to see: Further explanations Video N ° 1 and Video N ° 2

Honda 144 cm3 engine, the second "retrofitted".

- **I chose gasoline as fuel without the addition of water.**
- **I decided to drive the engine with only one valve (modified carburetor).**
- **I chose to use the ambient air to ensure the volatilization of the gasoline.**
- **I designed a "bubbler" heated by the exhaust gases with an adjustable thermostatic valve.**
- **I adopted a cold starting system to force the bubbling, or the volatilization of the fuel.**

The fact of having chosen the volatilization of the fuel by aspiration of the ambient air through it and the adoption of a "bubbler" heated at constant temperature as well as the maintenance of the fuel level therein, as for the carburettors, allows to freeze the most important parameters. A device for heating the air at constant temperature remains to be done, but it will be soon.

Despite everything, the adoption of these provisions allowed me to consider piloting the engine with a single valve, or more exactly with its modified carburetor but capable of operating normally if necessary.

THE CARBURETOR CHANGES.

You therefore take the original carburetor without its air filter, and you remove the choke flap which is located at the entrance (see drawing).

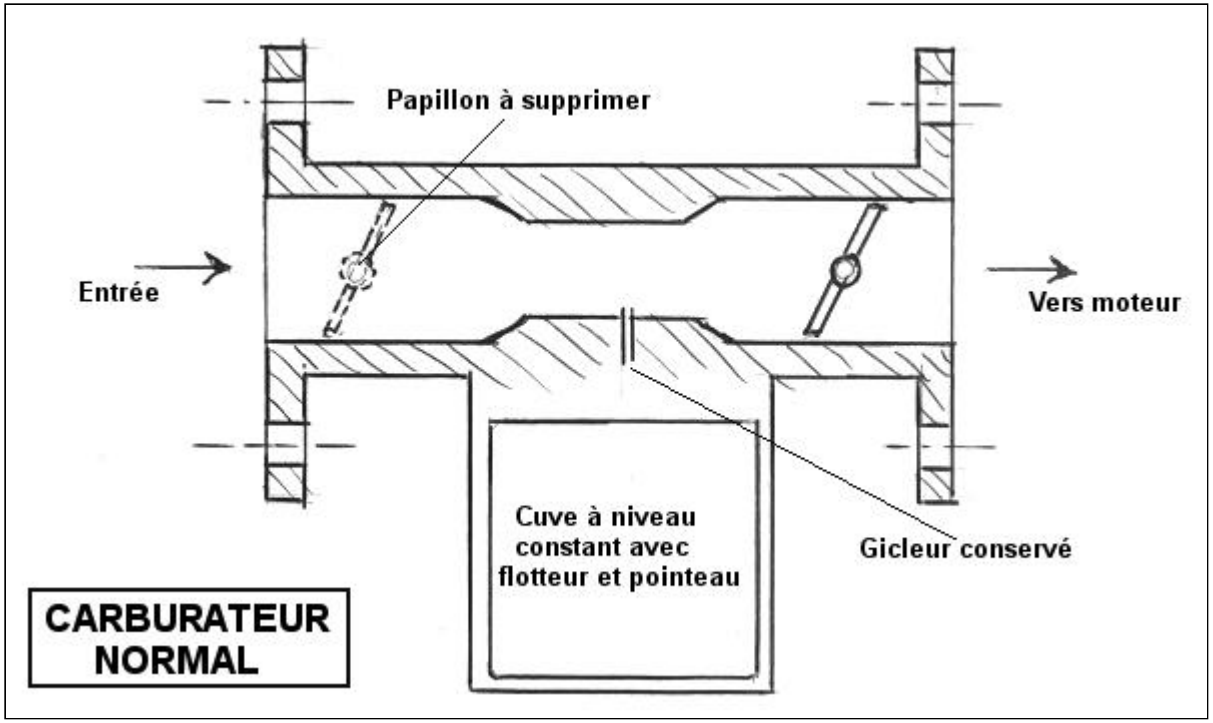

Keep all the rest of the carburetor in working order, which may be useful for starting up or rather for future tests with fuels such as fuel oil or other products requiring preheating of the assembly.

A nozzle must be fitted to the carburetor to suck the gas from the reactor, preferably adjustable (see drawings). This nozzle consists of a tube installed in the center of the carburetor nozzle and having a conical part adjustable in position to allow the gas flow to be adjusted relative to the air. This setting will be different depending on the fuel used and its mixture with water. The space between the tube and the nozzle must be small enough, proportional to the engine displacement, so that the vacuum in the nozzle is sufficient at low speed and ensure minimum "bubbling". The best would obviously be to be able to vary this space according to the opening of the throttle, which would lead us to build from scratch a special variable nozzle carburetor. I will provide you with the plans forsuch a carburetor of my invention. Pay attention to the position of the end of the nozzle tube in relation to the narrowed part of the nozzle, it must be adjusted experimentally by loosening the tube from its support and sliding it more or less forward or backward.

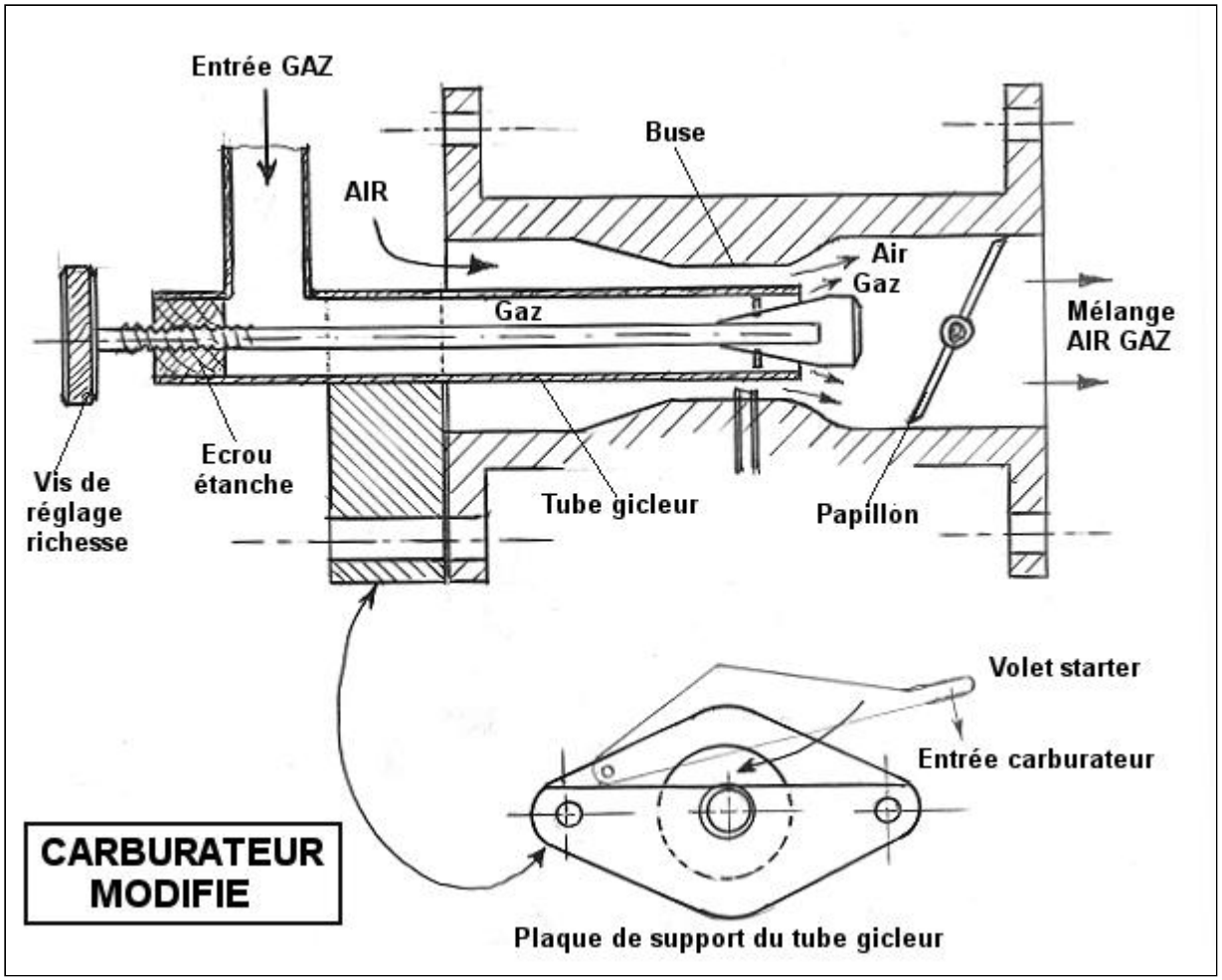

Obviously, you can imagine other solutions to achieve carburetion, let your imagination work. What I am describing to you is far from very sophisticated, so you can fine tune it further if you have a good grasp of the engine, carburetor and chemistry issues.

For cold starts you can install a pivoting shutter in front of the air inlet of the carburetor, and it is also through this air inlet that you will introduce a little gasoline with a burette, which initially will be easier than feeding the carburetor.

THE REGULATED HEATING BUBBLE.

The heating of the bubbler is ensured by the circulation of exhaust gases taken at the outlet of the reactor, and sent to a metal coil placed at the bubbler bottom. The regulation of the passage of hot gases in the coil is controlled by a central heating radiator thermostatic valve.

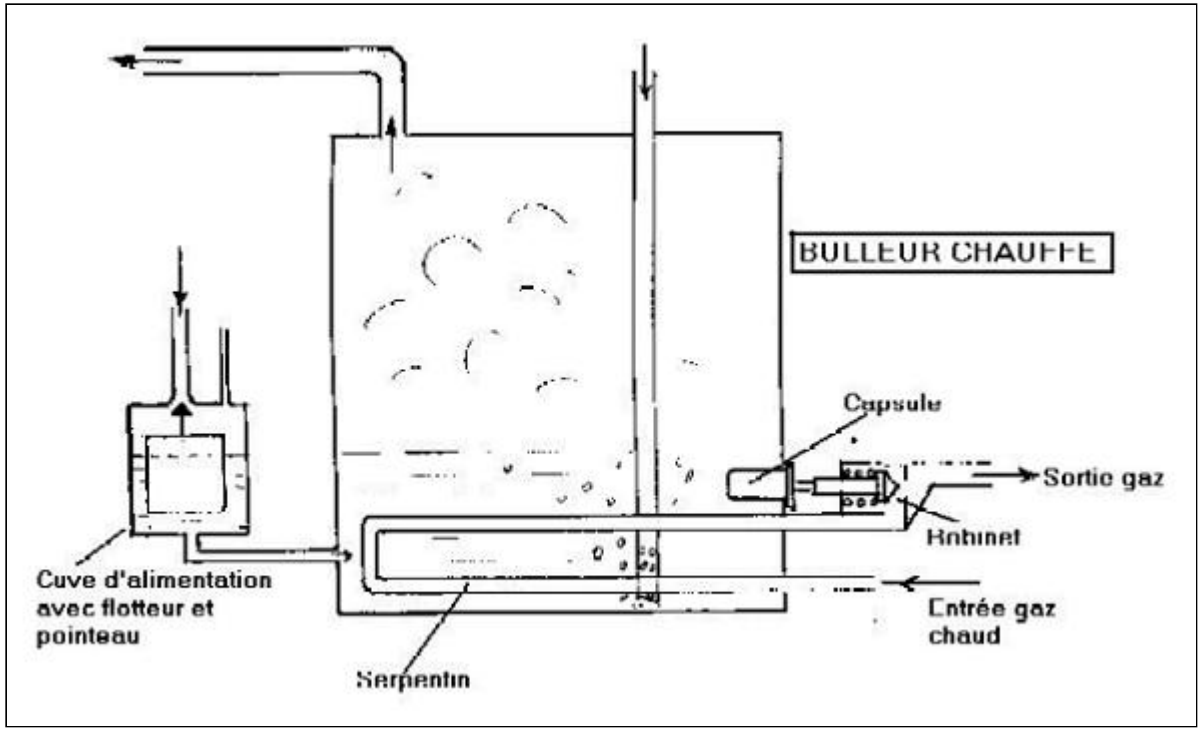

The set is quite easy to build with a little skill or that of a DIY friend.

Take the thermostatic capsule out of its mechanism which must be separated from the tap.

Examine the drawings and build something similar, which you will install over your bubbler after cutting it out. Examining the drawings will reveal more to you than a long speech.

16:41:53

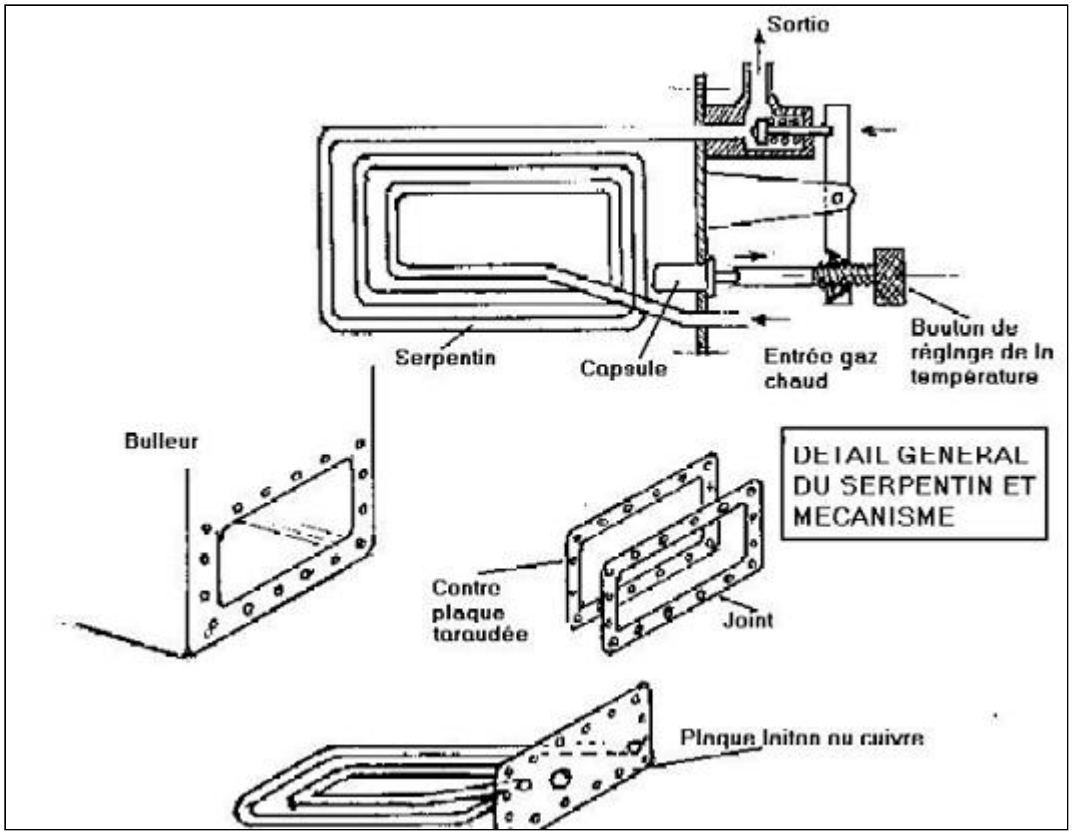

A FEW REMINDERS ON THE COMBUSTION OF FUEL IN ENGINES.

I have not written the following lines for those who have nothing more to learn in terms of motorization, but for those who are a little more novice than me on the subject and who want to tackle the MONSIEUR system. PANTONE.

THE GASOLINE ENGINE, CALLED EXPLOSION ENGINE.

Let's remember : For an engine to run properly and produce as little pollution as possible, the fuel used simply needs to be completely burned in the right conditions. In a gasoline engine, known as an explosion, gasoline enters the cylinder, mixed with air in the form of droplets of varying size. These droplets were produced by spraying using a carburetor or injector.

In the cylinder of a gasoline engine, each of these droplets mixed with air, is ultimately a gigantic sphere in relation to the surrounding molecules, and which has only its outer surface in contact with the air containing the oxygen required for combustion. At the time of ignition, initially, only the surface of the sphere ignites and not even in its entirety since the air contains a significant part of incombustible gases (nitrogen etc.80%) which hinders combustion. Obviously this continues anyway as best it can, with delay, hampered even more by the invasion of the environment by the combustion gases. Despite everything, the whole phenomenon appears to us to be very rapid, but on closer inspection, and without going into the examination of more subtle details, the thing is ultimately dismal.It is also lamentable to see that we are satisfied with that when we see the electronic prowess implemented on completely secondary points in the automotive field.

You now understand why gas engines pollute less and have better efficiency. Mixing with air is easier to obtain, each fuel molecule has less problem to be in the presence of the oxygen molecule which it needs. The combustion is therefore faster and more complete and we can give it the name of explosion.

Because of this alone, the Pantone reactor system brings a marked improvement to the gasoline engine which rises to the level of the gas engine. As a bonus, the PANTONE system allows us to run on gas and it seems, among other things partly with hydrogen from decomposed fuels, without having any storage problems, and by using our conventional fuels, our classic tanks, our classic engines (petrol or fuel), our classic technology, in short everything that already exists without major modifications. Always as a bonus, we have the possibility of considerably increasing the compression ratio, and therefore the efficiency of these engines without fear of self-ignition.

Coming back to the explanations of the operation of the gasoline engine, and to repeat myself a little, let us observe that the mixture, generally bad and badly proportioned, is compressed in the cylinder head and ignited by an electric spark, which produces a combustion more or slower than we usually call an explosion. This combustion inside the compressed mixture is therefore more or less rapid, more or less regular and more or less worthy of being called an explosion. The worst part is that if all the gasoline droplets have not found enough oxygen to burn,there will obviously be gasoline rejected with the exhaust gases either in the form of gasoline vapor or in the form of carbon monoxide produced by incomplete reactions during combustion, i.e. by carbon from the heated and unburned gasoline.

In conclusion, for the gasoline engine, spraying by any means whatsoever is not the best solution and to use it, the greatest care must be taken in the preparation of the air / gasoline mixture before its introduction into the gasoline. engine.

THE "DIESEL" ENGINE, SAID INTERNAL COMBUSTION ENGINE.

In this type of engine, things are a little different although it is supplied with fuel by spraying, and generally by direct injection thanks to a high pressure pump and injectors.

Indeed, the engine does not admit a mixture of air and fuel, but only a volume of air substantially equal to the capacity of the cylinder. It is only after the compression of this air that the fuel is injected, in the form of a spray thanks to an injector. Depending on the power required from the engine, more or less fuel is injected (generally fuel), which requires more or less time depending on the quantity.

Arriving in the compressed air mass and heated by this compression, the fuel droplets spontaneously ignite and burn, this combustion is relatively slow and lasts the entire duration of the injection. The fuel droplets arrive in a medium very largely overdosed in oxygen and find it quite easily, moreover, the combustion being done gradually, things go much better than for the gasoline engine. Obviously, it is enough never to inject more fuel than the engine is capable of swallowing air, which has led to the adoption of a compressor on this type of engine.

Despite everything in this type of engine too, great care is taken to the quality of the spray that is sought as the finest possible.

Therefore, in the Diesel engine it is no longer necessary to take special care with any mixture outside it since it only admits each time, only its maximum dose of ambient air and that the fuel is injected only after air intake inside the engine and after compression, without paying attention to the proportion of the mixture if it is not to exceed a certain dosage.

While not all of these words are those of an engineer, I hope they will save you time.

Good luck with your work. Mr. David.

To the rest and details of this assembly

Page 1 Page 2 Page 3 Page 4 Page 5 Page 6 Page 7 Page 8 Page 9 Page 10 Page 11 Page 12 Page 13 Page 14 Page 15 Page 16